68117 T.E. (Elect.) Sem. V (Rev.) 14/1/08

Control System - I

H-K

5-07. **(REVISED COURSE)** CD-5982

(3 Hours) [Total Marks : 100

MAS 76

N.B. (1) Question No. **1** is **compulsory.**
(2) Attempt total **five** questions.
(3) **Figures** to the **right** indicate marks.
(4) Make **suitable** assumptions wherever **required.**

T.E (Elect) V Rev Control System - I 14/1/08

1. (a) A system is governed by the differential equation — 20

$$\frac{d^3y(t)}{dt^3} + \frac{6d^2y(t)}{dt^2} + \frac{11dy(t)}{dt} + 10y(t) = 8u(t)$$

Where y(t) is the output and u(t) is the input of the system; obtain state space representation of the system.

(b) Find the transfer function for the system represented by flow graph.

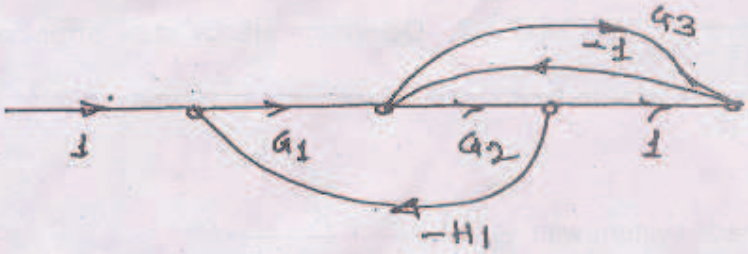

(c) Obtain the transfer function from the log-magnitude plot shown below :—

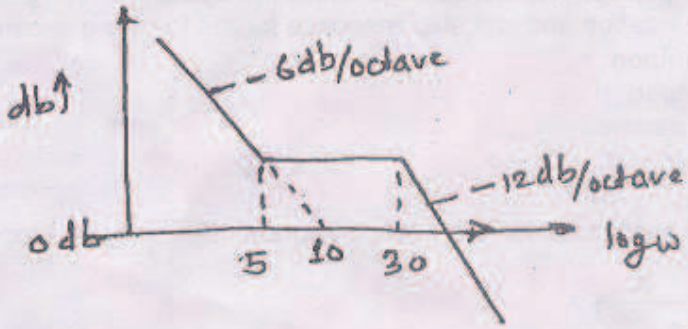

(d) Applying Routh's criterion, find range of K for stability of a system, whose characteristic equation is given by —

$$s^3 + 3K s^2 + (K + 2) s + 4 = 0.$$

2. (a) Determine C/R for the following block diagram. 10

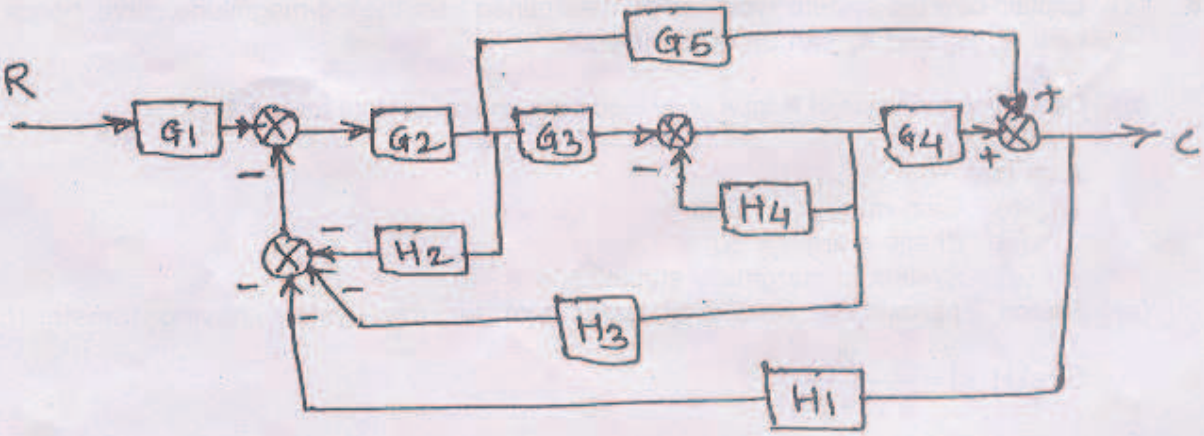

(b) Derive the transfer function for armature controlled D.C. Servo Motor. 10

[TURN OVER

T.E (Elect) Rev Control Systems - I
14/1/08

3. (a) The system shown below uses a rate feed back controller. Determine the tachometer constant K_t, so as to obtain the damping ratio of 0·5, calculate corresponding T_p, M_p, W_d and T_s. 10

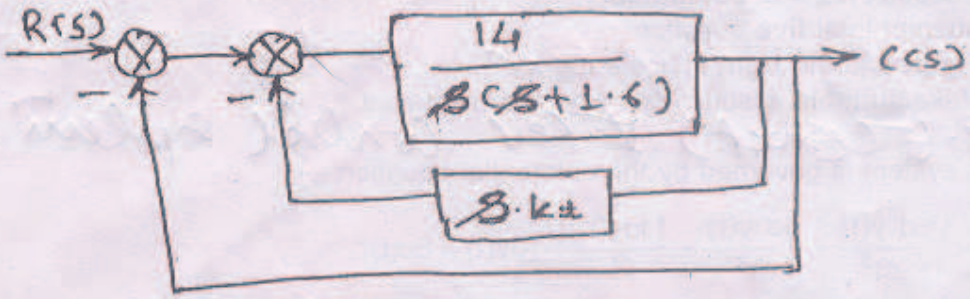

(b) A certain feed back control system is described by the transfer function $G(s) = \frac{K}{s^2(s+20)(s+30)}$ and H(s) = 1, Determine steady state error coefficients and also determine the value of K to limit steady state error to 10 units, due to input $r(t) = 1 + 10t + 20t^2$. 10

4. (a) For the unity feed back system with $G(s) = \frac{K}{(s+1)^3(s+4)}$. 10

(i) Find the range of K for stability
(ii) Find the frequency of oscillations when the system is Marginally stable.

(b) Show the pole zero location and unit step response for the following second order systems :— 10

(i) Under damped
(ii) Over damped
(iii) Critically damped
(iv) Undamped.

5. (a) Draw the complete root locus for the system represented by open loop transfer function, 10

$$G(s)H(s) = \frac{K}{(s+2)^3}.$$

(b) Draw the complete Nyquist plot for the system whose open loop transfer function is $G(s)H(s) = \frac{K}{s(s+2)(s+10)}$ determine the range of K for which close loop system is stable. 10

6. (a) Explain how the system 'type' can be determined from the log-magnitude curve, hence explain how K_p, K_v and K_a can be determined. 10

(b) Determine the value of K for a unity feed back control system having $G(s) = \frac{K}{s(s+2)(s+10)}$ such that — 10

(i) Gain margin = 10 db
(ii) Phase margin = 50°
(iii) System is marginally stable.

7. (a) Sketch approximate nature of polar plot for the system having transfer function $G(s)H(s) = \frac{K}{s^2(1+sT_1)}$. 20

(b) Discuss in detail any one type of damping for a Second Order System.
(c) Derive expression for peak time-up.
(d) Explain the co-relation between time and frequency domain specifications.